Conservation Genetics **4:** 95–103, 2003.
© 2003 *Kluwer Academic Publishers. Printed in the Netherlands.*

Use of restriction fragment length polymorphisms to identify sea turtle eggs and cooked meats to species†

M. Katherine Moore[1,*], John A. Bemiss[1], Susan M. Rice[2], Joseph M. Quattro[3] & Cheryl M. Woodley[1]

[1]*National Oceanic and Atmospheric Administration, National Ocean Service, National Centers for Coastal Ocean Science, Center for Coastal Environmental Health and Biomolecular Research at Charleston, 219 Fort Johnson Rd, Charleston, SC 29412-9110;* [2]*U.S. Fish and Wildlife Service, Eastern Shore of Virginia National Wildlife Refuge, 5003 Hallett Circle, Cape Charles, VA 23310-1122;* [3]*Department of Biological Sciences, Baruch Institute, School of the Environment, Program in Marine Science, University of South Carolina, Columbia, SC 29208 (*Author for correspondence: Phone: (843) 762-8514; Fax: (843) 762-8700; E-mail: kathy.moore@noaa.gov)*

Received 11 October 2001; accepted 18 March 2002

Key words: forensic, mitochondrial DNA, restriction fragment length polymorphism, sea turtles, species identification

Abstract

One of the many threats to sea turtle populations is the take of turtles and their eggs for consumption and sale. Improved species identification methods for sea turtle eggs and cooked meats would facilitate prosecution of those involved. Fatty acid-based methods to identify eggs cannot resolve loggerheads and the two ridley species. Protein-based methods are not applicable to eggs or cooked meat. We present methods to extract DNA from turtle egg and cooked meat and to produce diagnostic restriction fragment length polymorphism patterns in the cytochrome b region of the mitochondrial DNA. This method works on DNA from any tissue, and provides wildlife law enforcement another tool to combat illegal take of endangered species.

Introduction

Though sea turtles were once abundant, habitat destruction, fishery bycatch, and harvest for consumption and handicrafts have greatly reduced their numbers (National Research Council 1990). The US Endangered Species Act of 1973 (ESA) lists leatherbacks (*Dermochelys coriacea*), green turtles (*Chelonia mydas*), hawksbills (*Eretmochelys imbricata*), flatbacks (*Natator depressus*), olive ridleys (*Lepidochelys olivacea*), and Kemp's ridleys (*L. kempii*) as endangered throughout all or part of their range, and loggerheads (*Caretta caretta*) as threatened. Additionally, these ancient reptiles are protected from trade by the Lacey Act and the Convention on International Trade in Endangered Species of Wild Fauna and Flora. The ability to identify eggs and cooked meat to species would assist in prosecution of those involved in the illegal trade, while highlighting which species are most affected.

Despite protection efforts worldwide, sea turtle exploitation continues. From 1995–1999, more than 30,000 eggs [valued at $1–$12 each (S. Rice, unpub. data)] and 2,500 kg of meat [valued at $2.75–$23/kg (S. Rice, unpub. data)] were seized in law enforcement cases (USFWS and NMFS, unpub. data), representing only a fraction of the total take. In Puerto Rico, an estimated 1,500 green and hawksbill turtles are poached annually (S. Rice, unpub. data), with few cases prosecuted. Much of the illegally harvested

† **Disclaimer**: The National Ocean Service (NOS) does not approve, recommend, or endorse any proprietary product or material mentioned in this publication. No reference shall be made to NOS, or to this publication furnished by NOS, in any advertising or sales promotion which would indicate or imply that NOS approves, recommends, or endorses any proprietary product or proprietary material mentioned herein or which has as its purpose any intent to cause directly or indirectly the advertised product to be used or purchased because of NOS publication.

meat is destined for restaurants where, once cooked, traditional methods of identification [morphology or isoelectric focusing (IEF)] are not effective (Braddon et al. 1982).

Sea turtle egg identification using morphometrics is often inconclusive due to overlapping egg diameters and nesting ranges between species (Miller 1997). Eggs cannot be identified using IEF (S. Galloway, pers. comm.), and fatty acid profiles can only differentiate some species (Seaborn & Moore 1993).

Our objective was to develop a DNA-based method to identify sea turtles, a common approach for species identification (Baker et al. 1996; Ram et al. 1996). We sequenced a region of the mitochondrial cytochrome b gene, and selected restriction enzymes that yield definitive diagnostic restriction fragment length polymorphism (RFLP) patterns. We have tested this technique with eggs as well as cooked and raw meat, and successfully used the method to aid prosecution of ESA violators.

Materials and methods

Collection of voucher specimens

Eggs, blood, skin, or muscle samples were obtained from all seven species of marine turtle (leatherback, green, hawksbill, flatback, olive ridley, Kemp's ridley, and loggerhead) and two species of freshwater turtle (common snapping turtle, *Chelydra serpentina* and alligator snapping turtle, *Macroclemys temmincki*). Voucher samples were accompanied by species certification forms signed and dated by the collector (Woodley & Ball 1996). Samples were collected from as many different geographic locations and rookeries as possible. Skin was stored at room temperature in NaCl-saturated 20% DMSO. Blood was diluted approximately 1:10 in a stock solution of SDS-urea (1% SDS, 8M urea, 240 mM Na_2HPO_4, 1 mM EDTA pH 6.8) and stored at room temperature.

Extraction of DNA from blood, muscle, and skin

Total DNA was isolated from blood in SDS-urea according to White and Densmore (1992; protocol 11), while DNA from frozen tissues (approximately 0.2 g muscle or skin) was extracted using standard proteinase K protocols (Hillis et al. 1996) or with a DNeasy Tissue Kit (Qiagen, Valencia, CA).

Extraction of DNA from egg

We extracted DNA from approximately 2.0 cm^2 of egg shell, which is lined with a thin membrane of maternal origin (Miller 1997). The minced shell fragment was incubated with 1 ml of SDS-urea and gentle shaking at 36 °C overnight. DNA was then extracted according to White and Densmore (1992; protocol 11). DNA was also extracted from 50 mg of egg shell or egg white using DNeasy Tissue Kits (Qiagen, Valencia, CA).

Extraction of DNA from cooked meat

Cooked turtle meats routinely seized in law enforcement actions are usually grilled or stewed with vegetables and spices. Meat fragments (3–5 g) were isolated, rinsed with sterile water, minced and denatured in 20 ml of SDS-urea overnight at 36 °C. DNA was extracted from a 2 ml subsample of the resulting slurry with a standard phenol-chloroform extraction (Ausubel et al. 1994). Extraction with Qiagen DNeasy kits was also successful. With either protocol, the extraction must be done gently so as not to further fragment the DNA.

PCR and sequencing

PCR and DNA extractions were accomplished in separate laboratories. We used sterile plasticware and pipettors dedicated for PCR set-up. Surfaces were cleaned with bleach before PCR. Positive and negative (no template) controls were run with each set of reactions.

We amplified a diagnostic 875–876 bp fragment of cytochrome b/tRNA Glu using universal primers Glu-L (5′-TGATATGAAAAACCATCGTTG-3′) and Cb3-H (5′-GGCAAATAGGAARTATCATTC-3′; Palumbi et al. 1991). To eliminate non-specific binding, new primers were developed by sequencing flanking regions using primers 13802L (5′-CAAACAACCCACCAGCATCAA-3′) and 15159H (5′-TGAGGCTGTTCGTTGTTTTGA-3′). We designed these primers from an alignment of six reptile species. Internal primers were used to complete this 1398–1399 bp sequence (details available from M.K. Moore).

We amplified samples in 50 μl reactions containing 50 ng of DNA template, 20 mM Tris, 50 mM KCl, 0.2 mM each dNTP, 2 mM $MgCl_2$, 20 mM each primer, and 2.5 units *Taq* polymerase (Gibco BRL, Rockville MD). Annealing temperature was 55 °C. PCR products were gel-purified (Rosel & Block 1996)

and cycle sequenced using ABI Big Dye Terminator sequencing kits (Applied Biosystems, Foster City, CA).

We sequenced 1–6 individuals of each sea turtle species, two common snapping turtles, and one alligator snapping turtle (Appendix 1). All fragments were sequenced in both directions. Sequences were aligned by eye, and new primers, longGlu-L (5′-TGATTYGAAAAACCACCGTTGTATTCA-3′) and longCb3-H (5′-TAGGCRAATAGGAARTATCATT-CTGG-3′), were designed from these alignments for use in PCR-RFLP analysis.

Analysis of sequence data and restriction enzyme selection

Autapomorphic characters (here, derived characters shared within, not between, species) are the characters most useful for differentiating species. These characters are found near the branch tips of phylogenetic trees. We selected restriction enzymes likely to produce species-diagnostic RFLPs by using our cytochrome b sequences and the published sequence of *Platysternon megacephalum* (Accession #U81361; Shaffer et al. 1997) to construct restriction maps for several common enzymes (*Aci* I, *Alu* I, *Dde* I, *Msp* I, *Rsa* I, and *Sau* 3AI). We made a presence/absence matrix of the restriction sites (Figure 1), and then mapped these sites on a phylogenetic tree. We truncated the 875–876 bp target sequence to 804 bp because some sequences lacked data for tRNA-Glu. The sequence removed contained no restriction sites of interest. Duplicate haplotypes were excluded from analysis. PAUP v. 4.0b3a (Swofford 2000) was used to conduct a maximum parsimony analysis of the aligned sequences using a branch-and-bound search with 1000 bootstrap replicates. MEGA v. 1.0 (Kumar et al. 1993) was used to construct a neighbor-joining tree using Kimura 2-parameter distances (Kimura 1981) and 1000 replicates. MacClade v. 3.04 (Maddison & Maddison 1992) was used to map informative restriction sites for all enzymes as characters onto the phylogenetic tree. DNA fragments corresponding to autapomorphic restriction sites were used to identify diagnostic RFLP profiles for each species.

PCR and Restriction enzyme digestion

LongGlu-L and longCb3H were used to amplify an 875–876 bp fragment of cytochrome b for RFLP analysis. PCR conditions were the same as above, except the annealing temperature was 56 °C. PCR products from 61 loggerheads, 31 green turtles, 21 leatherbacks, 33 hawksbills, 14 Kemp's ridleys, 29 olive ridleys, one flatback, one alligator snapping turtle, two common snapping turtles (Appendix 2), chicken (*Gallus domesticus*), cow (*Bos taurus*), pig (*Sus scrofa*), sheep (*Ovis aries*), and white-tailed deer (*Odocoileus virginianus*) were digested with *Alu* I and *Msp* I (New England Biolabs, Beverly, MA) according to manufacturers' recommendations. Restriction fragments were electrophoresed in a 7.5% polyacrylamide gel (29:1 acrylamide:bis acrylamide) at 60 V overnight. Gels were stained with ethidium bromide and photographed under UV light. A molecular weight marker (pGEM DNA ladder, Promega, Madison, WI) was used to estimate DNA fragment sizes.

Blind samples

To test our assay, samples of sea turtle meat were cooked in Puerto Rico and sent blind to CCEHBR. Species identification of raw samples was made morphologically by an expert. Under supervision of a law enforcement officer, a Puerto Rican chef cooked the meat using traditional recipes. Each sample [8 hawksbills, 5 green turtles, 1 Antillean manatee (*Trichecus manatus manatus*) and 1 spiny lobster (*Panulirus argas*)] consisted of three sub-samples (stewed, grilled and raw meat). To grill, fillets were browned in vegetable oil and simmered with onions, garlic, vinegar, and spices until well done. Stews were prepared by cutting the meat into ∼2.5 cm cubes which were cooked with vegetables and spices. Treatments reflect conditions expected for seized evidence submitted for analyses. Both voucher (raw meat) and cooked samples were frozen (−20 °C) after cooking, and the species identity was sealed in an envelope until DNA testing was completed. The identification was then cross-checked to validate the method.

Results

Sequence analysis

Of the 804 analyzed bases, 535 were monomorphic, 269 were polymorphic, and 199 were phylogenetically informative. There were two most parsimonious trees of 519 steps each (Consistency Index = 0.64, Retention Index = 0.68), one of which shared the same topology as the neighbor-joining tree (Figure 2). The matching neighbor-joining and maximum parsimony trees identified loggerheads as the sister group of

enzyme	Alu I							Msp I						Aci I			Dde I								Rsa I							Sau 3A1					
site name	A	B	C	D	E	F	G	H	I	J	K	L	M	N	O	P	Q	R	S	T	U	V	W	X	Y	Z	AA	BB	CC	DD	EE	FF	GG	HH	II	JJ	KK
cut site	156	168	228	417	471	498	819	184	281	388	614	652	801	157	281	421	164	195	464	494	536	548	680	827	169	172	262	369	439	526	628	101	144	357	654	739	797
Lo1	0	0	0	0	0	1	1	0	0	1	0	0	0	0	1	0	1	0	0	0	1	1	0	0	0	0	1	0	0	1	1	0	1	0	0	0	0
Lo2	0	0	0	0	0	1	1	0	0	1	0	0	0	0	1	0	1	0	0	0	1	1	0	0	0	0	1	0	0	1	1	0	1	0	0	0	0
Lk1	0	0	0	0	0	1	1	0	1	1	0	0	0	0	0	0	0	0	0	0	1	1	0	0	0	0	1	0	0	1	1	0	1	0	0	0	0
Lk2	0	0	0	0	0	1	1	0	1	1	0	0	0	0	0	0	1	0	0	0	1	1	0	0	0	0	1	0	0	1	1	0	1	0	0	0	0
Cc1	0	0	0	0	1	0	1	0	0	1	1	0	0	0	1	1	0	0	1	0	1	1	0	0	0	0	1	0	0	1	1	0	1	0	0	0	0
Cc2	0	0	0	0	1	0	1	1	0	1	1	0	0	0	1	1	0	0	1	0	1	1	0	0	0	0	1	0	0	1	1	0	1	0	0	0	0
Ei1	1	0	0	0	0	0	1	0	0	1	1	0	0	0	1	1	1	0	0	0	1	1	0	0	0	0	1	0	0	1	1	0	1	0	0	0	0
Nd1	0	1	1	0	0	0	0	1	0	1	1	0	0	1	1	1	1	0	0	1	1	1	0	0	0	0	1	0	0	1	0	0	1	0	1	0	0
Cm1	0	0	1	1	0	0	0	1	0	0	1	0	0	0	0	1	0	0	0	1	1	0	0	0	0	0	1	0	0	1	1	0	1	0	1	0	0
Cm2	1	0	1	1	0	0	0	1	0	0	1	0	0	0	0	1	0	0	0	1	1	0	0	0	0	0	1	0	0	1	1	0	1	0	1	0	0
Dc1	0	0	0	0	0	0	1	1	0	0	0	0	0	0	0	1	0	1	1	1	1	1	0	0	1	0	1	0	1	1	0	0	0	1	1	1	0
Dc2	0	0	0	0	0	0	1	1	0	0	0	0	0	0	0	1	0	1	1	1	1	1	0	0	1	0	1	0	1	1	0	0	0	1	1	1	0
Cs1	0	0	0	0	0	0	0	1	0	1	0	1	0	0	1	0	0	0	1	1	1	1	1	0	0	1	1	0	0	1	1	0	1	1	0	0	1
Mt1	0	0	0	0	0	1	0	1	0	1	0	1	1	0	0	0	0	0	1	1	0	0	0	1	0	0	1	1	0	1	1	1	1	1	0	0	0
Pm1	0	0	0	0	0	1	0	0	0	0	0	0	1	0	0	1	0	0	1	1	0	0	0	0	0	0	1	1	0	1	1	?	1	0	1	0	0

Figure 1. Presence or absence and letter designations of restriction enzyme sites. Cut site A occurs just after base 156 in the reference sequence for *E. imbricata*, Genbank accession number AF385673. Sequence information is unavailable for the region encompassing site FF for *P. megacephalum*. Lo = *L. olivacea*; Lk = *L. kempii*; Cc = *Caretta caretta*; Ei = *E. imbricata*; Nd = *N. depressus*; Cm = *Chelonia mydas*; Dc = *D. coriacea*; Cs = *Chelydra serpentina*; Mt = *Macroclemmys temmincki*; Pm = *Platysternon magacephalum*.

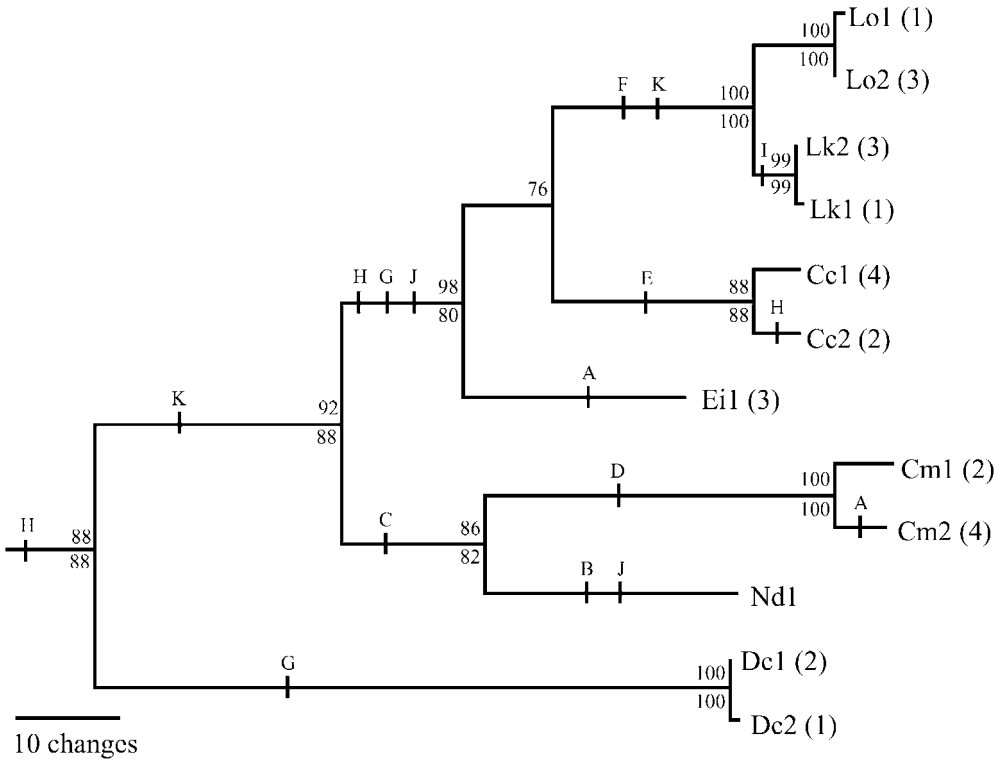

Figure 2. Neighbor-joining tree constructed from 804 bp of turtle cytochrome b sequence data. This tree topology was also shared by one of the two most parsimonious trees. Bootstrap values above the nodes are for neighbor-joining and below the nodes are for parsimony. Bootstrap values less than 70% are not shown. Numbers in parentheses after species abbreviations represent the number of sequenced individuals with that haplotype. Characters mapped onto the tree are informative restriction sites for *Alu* I (A–G) and *Msp* I (H–M). The tree was rooted with sequences of the freshwater turtle taxa (not shown). Lo = *L. olivacea*; Lk = *L. kempii*; Cc = *Caretta caretta*; Ei = *E. imbricata*; Nd = *N. depressus*; Cm = *Chelonia mydas*; Dc = *D. coriacea*.

the *Lepidochelys* clade, whereas the other maximum parsimony tree placed hawksbills as the sister group of *Lepidochelys*.

RFLP analysis

Alu I recognized the highest proportion of autapomorphic cut sites (see Figure 1 for site designations): Site B for flatbacks (producing bands of 166 and 60 bp), site D for green turtles (460 and 189 bp), and site E for loggerheads (469 and 348 bp). Additionally, the presence of only site G defines leatherbacks (818 bp), and the combination of sites A and G defines hawksbills (663 bp). *Msp* I was chosen to distinguish among the remaining species, Kemp's and olive ridleys, based on the presence or absence of site I. Olive ridleys lack the site, and have a 387 bp band instead of the 280 and 107 bp bands present in Kemp's ridleys (Table 1). Greens' RFLPs exhibited dimorphism when digested with *Alu* I, with Pacific greens possessing an additional restriction site not present in Atlantic greens. Loggerheads exhibited dimorphic patterns when digested with *Msp* I, though the dimorphism did not correspond with geographic location (Figure 3). Non-sea turtle meats either failed to amplify (chicken), or produced PCR-RFLP patterns different from those of sea turtles (freshwater turtles, alligator, pork, beef, venison, and lamb).

Blind samples and forensics cases

All blind standards of cooked and raw sea turtle were correctly identified to species: 8 hawksbills and 5 green turtles. The manatee sample amplified, but RFLP analysis yielded a non-sea turtle banding pattern. The lobster sample yielded DNA of sufficient quality for amplification but did not amplify despite repeated attempts, so no species identification was made.

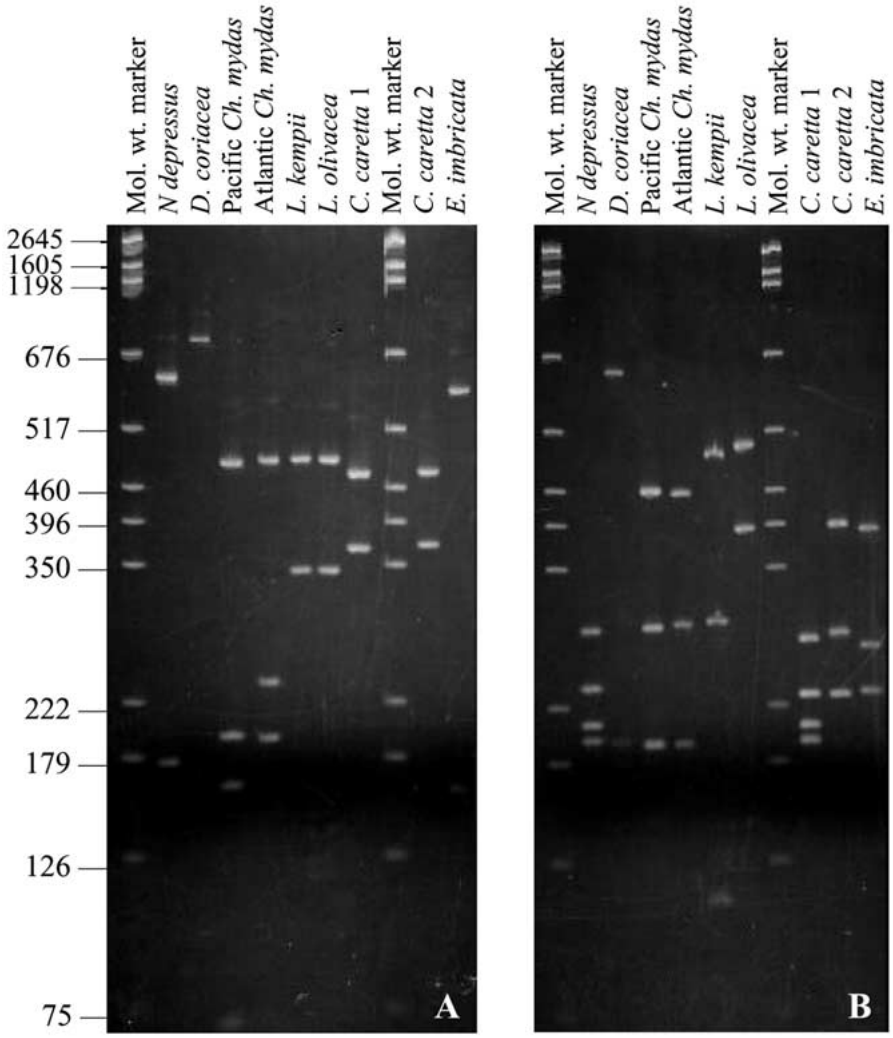

Figure 3. Photographs of polyacrylamide gels showing restriction fragment length polymorphisms for all seven species of sea turtles. Samples on gel A were digested with *Alu* I, and those on gel B with *Msp* I. Numbers at the left are sizes (bp) of bands in size standard.

Discussion

Sequence analysis

Our phylogeny was largely concordant with other marine turtle molecular phylogenies (Bowen et al. 1993; Dutton et al. 1996). Since our phylogeny was based on the region analyzed by Bowen et al. (1993), but included an additional 372–373 bp, it is not surprising that we generated a tree of very similar topology but better resolution. Nonetheless, our trees lack robust support for the position of hawksbill turtles relative to other species traditionally placed in the Carettini (hawksbills, loggerheads, and ridleys).

The dimorphic restriction patterns present in greens and loggerheads are as expected given the findings of earlier phylogenetic studies. Both Dutton et al. (1996) and Bowen et al. (1992, 1994) found deep nodes between the Indo-Pacific and Atlantic-Mediterranean greens, and between two matrilines of loggerheads present in both the Atlantic and Indian Oceans.

Species identification

To date, effective evidence for illegal take of sea turtles has consisted mainly of raw meat seized from poachers. Ideally, law enforcement should be able to

Table 1. Fragment sizes resulting from digestion of turtle PCR products with *Alu* I and *Msp* I. Fragment sizes given here are exact, as determined by sequencing

	Alu I		*Msp* I	
	Fragment sizes	Haplotype	Fragment sizes	Haplotype
L. olivacea	58, 321, 496	A	387, 488	A
L. kempii	58, 321, 496	A	107, 280, 488	B
C. caretta 1	58, 348, 469	B	225, 263, 387	C
C. caretta 2	58, 348, 469	B	183, 204, 225, 263	D
E. imbricata	58, 154, 663	C	225, 263, 387	C
N. depressus	60, 166, 649	D	183, 204, 225, 263	D
Atlantic *Chelonia mydas*	189, 226, 460	E	183, 263, 429	E
Pacific *Chelonia mydas*	72, 154, 189, 460	F	183, 263, 429	E
D. coriacea	58, 818	G	184, 692	F
Chelydra serpentina	875	H	183, 204, 224, 264	D
M. temmincki	379, 497	I	75, 149, 184, 204, 264	G

use any seized sea turtle tissue as evidence of illegal trade. Targeting restaurants was ineffective since no method to determine species of cooked meats was available.

There is ample precedent for the use of DNA in criminal cases, and this study shows that PCR-RFLP of cytochrome b can be used to differentiate marine turtle species from each other and from non-marine turtles: the blind test standards produced banding patterns consistent with voucher samples, demonstrating that classification of cooked sea turtle meat to species is possible with this assay. We also showed that sufficient DNA can be extracted from eggs for successful identification. Additionally, this technique has withstood courtroom scrutiny. Evidence has been identified to species in 11 of 12 cases submitted to our laboratory for analysis. Eight of these 11 cases are closed and resulted in convictions or plea bargains. Defendants received sentences ranging from deportation up to 8 months in federal prison.

We emphasize that collection of voucher samples from disparate geographic locations should continue. Because sea turtles are philopatric, many species exhibit strong population structuring in the non-coding D-loop of the mtDNA genome (Bowen et al. 1994; FitzSimmons et al. 1997); however, population structure is less pronounced in the slower-evolving cytochrome b region examined here. A survey of sea turtle cytochrome b sequences in Genbank revealed no novel RFLP haplotypes. If a novel haplotype were discovered during analysis, it would result in inconclusive findings, and sequencing could be used for conclusive identification. Also, the average consistency index for the characters shown in Figure 2 is high (0.82 ± 0.25). This low degree of homoplasy suggests that, if new sequence haplotypes result in restriction site changes, it is unlikely that this change will result in an RFLP pattern that is identical to that of a different species.

We have chosen RFLP analyses because it is economical, and profiles are easy for a jury to interpret. However, we recognize the need for diagnostics that are amenable to field use, as well as to evidence samples where DNA is severely sheared. We are currently evaluating data for short species-specific sequences that can be used for identification of severely degraded tissue (e.g. DNA from leather). We also acknowledge that species identification based on a single locus can be misleading if there is incomplete lineage sorting or introgression between the species involved (Anderson 2001). Sea turtle species, however, are separated by 10–50 million years, and fixed differences between species indicate complete lineage sorting (Bowen et al. 1993). Despite ancient separations, hybridization between members of the Cheloniidae have been reported (Karl et al. 1995), but these events are rare and unlikely to be encountered in law enforcement cases.

Acknowledgements

We gratefully acknowledge the following people, who shared samples used in this study: George Balazs,

Appendix 1. Sample name, collection location, sample type, and Genbank Accession Number for sequenced turtle samples. The first four letters of each sample name indicate species: Loli = *L. olivacea*; Lkem = *L. kempii*; Ccar = *C. caretta*; Eimb = *E. imbricata*; Ndep = *N. depressus*; Cmyd = *Chelonia mydas*; Dcor = *D. coriacea*; Cser = *Chelydra serpentina*; Mtem = *Macroclemmys temmincki*

Sample no.	Collection location	Sample type	Haplotype	Genbank accession #
Loli003	Suriname	Hatchling	Lo2	AF385669
Loli006	Sri Lanka	Hatchling	Lo1	AF385670
Loli007	Playa Nancite, Pacific Costa Rica	Blood from nesting female	Lo2	
Loli029	Playa Grande, Pacific Costa Rica	Egg	Lo2	
Lkem003	Galveston, TX, USA	Blood from captive juvenile	Lk2	
Lkem009	Galveston, TX, USA	Blood from captive animal	Lk2	AF385667
Lkem012	Galveston, TX, USA	Blood from captive animal	Lk1	AF385668
Lkem037	Rancho Nuevo, Tamaulipas, Mexico	Egg	Lk2	
Ccar226	Cape Canaveral, FL, USA	Hatchling	Cc1	AF385671
Ccar294	King's Bay, GA, USA	Blood from juvenile	Cc1	
Ccar391	N. Cape Island, SC, USA	Egg from stranded female	Cc1	
Ccar392	Hydrographer Canyon, N.W. Atlantic	Skin from incidentally taken animal	Cc1	
Ccar397	Hilton Head Is., SC, USA	Muscle from stranded subadult	Cc2	AF385672
Ccar398	Hilton Head Is., SC, USA	Muscle from stranded subadult	Cc2	
Eimb037	Mona Is., Puerto Rico	Blood from juvenile	Ei1	
Eimb127	Dominican Republic	Blood from juvenile	Ei1	AF385673
Eimb131	Dominican Republic	Blood from captive animal	Ei1	
Ndep002	Queensland, Australia	Hatchling	Nd1	AF385674
Cmyd004	Dominican Republic	Blood from juvenile	Cm1	AF385675
Cmyd018	Kaneohe Bay, HI, USA	Blood from juvenile	Cm2	AF385676
Cmyd094	Punalu'u, HI, USA	Blood from juvenile	Cm2	
Cmyd123	Laysan Island	Blood from juvenile	Cm2	
Cmyd318	Middleton Island, AK, USA	Skin from stranded adult female	Cm2	
Cmyd338	Christiansted, St. Croix, USVI	Muscle from stranded animal	Cm1	
Dcor034	Playa Langosta, Pacific Costa Rica	Hatchling	Dc1	AF385677
Dcor037	Melbourne, FL, USA	Muscle from stranded animal	Dc2	AF385678
Dcor038	Maryland, USA	Muscle from stranded animal	Dc2	
Cser003	Charleston, SC, USA	Muscle from adult animal	Cs1	AF385679
Cser002	Kaplan, LA, USA	Muscle from adult animal	Cs1	
Mtem001	Kaplan, LA, USA	Muscle from adult animal	Mt1	AF385680

Appendix 2. Species, collection location, and life stage information for samples that were assayed for RFLPs

Species	Collection location	No. of samples	Life Stage
C. caretta	Melbourne Beach, FL	2	Nesting females
C. caretta	Charleston Harbor, SC	16	Juvenile/subadult
C. caretta	King's Bay, GA	23	Juvenile/subadult
C. caretta	Brunswick, GA	20	Juvenile/subadult
Ch. mydas	Dominican Republic	3	Juvenile/subadult
Ch. mydas	Hawaii	22	Juvenile/subadult
Ch. mydas	Trident Submarine Basin, FL	8	Juvenile/subadult
D. coriacea	Maryland	1	Stranded adult
D. coriacea	Florida	1	Stranded adult
D. coriacea	Pacific Costa Rica	19	Eggs
E. imbricata	Dominican Republic	24	Juvenile/subadult
E. imbricata	Puerto Rico	9	Juvenile/subadult
L. kempii	Galveston, TX	14	Juvenile/subadult
L. olivacea	Suriname	3	Hatchlings
L. olivacea	Sri Lanka	3	Hatchlings
L. olivacea	Pacific Costa Rica	23	Eggs/blood from nesting females
N. depressus	Queensland, Australia	1	Hatchling
Macroclemmys temmincki	Kaplan, LA	1	Adult
Chelydra serpentina	Charleston, SC	1	Adult
Chelydra serpentina	Kaplan, LA	1	Adult

Marty Ball, Anna Bass, Brian Bowen, Richard Byles, Carlos Calvo, Andrea Cannon, Ann Colbert, Frances Cresswell, Carlos Diez, Peter Dutton, Lew Ehrhart, Antonio A. Mignucci, Mike Goode, Verena Hey, Zandy Hillis, Charlotte Hope, Rae E. Houke, Jr., Nilda Jiménez, Wavne McFee, Anne Meylan, Gustavo Serrano Mora, Sally Murphy, David Nelson, Pam Plotkin, Jane Provancha, William Rainey, Dickie Rivera, Connie Sears, Robert Spentz, Wendy Teas, Robert Van Dam, and Debbie Wolf. We also appreciate the help of Trey Knott for 'field-testing' this method in the laboratory. Thanks are due to Pat Fair, Steve Fain, Tom Greig, Rus Hoelzel, Ron Lundstrom, Allan Strand, and two anonymous referees for insightful review of the manuscript. This work could not have been accomplished without funding from the National Marine Fisheries Service, Office of Law Enforcement.

References

Anderson TJC (2001) The dangers of using single locus markers in parasite epidemiology: *Ascaris* as a case study. *Trends in Parasit*., **17**, 183–188.

Ausubel FM, Brent R, Kingston RE, Moore DD, Seidman JG, Smith JA, Struhl K (1994) *Current Protocols in Molecular Biology*. Wiley-Interscience, New York.

Baker CS, Cipriano F, Palumbi SR (1996) Molecular genetic identification of whale and dolphin products from commercial markets in Korea and Japan. *Mol. Ecol*., **5**, 671–685.

Bowen BW, Kamezaki N, Limpus CJ, Hughes GR, Meylan AB, Avise JC (1994) Global phylogeography of the loggerhead turtle (*Caretta caretta*) as indicated by mitochondrial DNA haplotypes. *Evolution*, **48**, 1820–1828.

Bowen BW, Meylan AB, Ross JP, Limpus CJ, Balazs GH, Avise JC (1992) Global population structure and natural history of the green turtle (*Chelonia mydas*) in terms of matriarchal phylogeny. *Evolution*, **46**, 865–881.

Bowen BW, Nelson WS, Avise JC (1993) A molecular phylogeny for marine turtles: Trait mapping, rate assessment, and conservation relevance. *Proc. Natl Acad. Sci. U.S.A*., **90**, 5574–5577.

Braddon SA, Caffrey BB, Pike JR (1982) *Identification of suspect sea turtle meat samples and determination of species, a law enforcement problem*. NOAA Technical Memorandum NMFS-SEFC-TM-105.

Dutton PH, Davis SK, Guerra T, Owens D (1996) Molecular phylogeny for marine turtles based on sequences of the ND4-Leucine tRNA and control regions of mitochondrial DNA. *Mol. Phylogenet. Evol*., **5**, 511–521.

FitzSimmons NN, Moritz C, Limpus CJ, Pope L, Prince R (1997) Geographic structure of mitochondrial and nuclear gene polymorphisms in Australian green turtle populations and male-biased gene flow. *Genetics*, **147**, 1843–1854.

Hillis DM, Moritz C, Mable BK (1996) *Molecular Systematics*. Sinauer Associates, Inc., Sunderland, Massachusetts, USA.

Karl SA, Bowen BW, Avise JC (1995) Hybridization among the ancient mariners: characterization of marine turtle hybrids with molecular genetic assays. *J. Hered*., **86**, 262–268.

Kimura M (1981) Estimation of evolutionary distances between homologous nucleotide sequences. *Proc. Natl Acad. Sci. U.S.A*., **78**, 454–458.

Kumar S, Tamura K, Nei M (1993) *MEGA: Molecular Evolutionary Genetics Analysis*. Pennsylvania State University, University Park, PA.

Maddison WP, Maddison DR (1992) *MacClade: analysis of phylogeny and character evolution*. Sinauer Associates, Sunderland, MA.

Miller JD (1997) Reproduction in sea turtles. In: *The Biology of Sea Turtles* (eds. Lutz PL, Musick JA), pp. 51–81. CRC Press, Boca Raton, FL.

National Research Council (1990) *Decline of the Sea Turtles: Causes and Prevention*. National Academy Press, Washington, DC.

Palumbi S, Martin A, Romano S, McMillan WO, Stice L, Grabowski G (1991) *A Simple Fool's Guide to PCR*. Department of Zoology and Kewalo Marine Laboratory, University of Hawaii, Honolulu, HI.

Ram JL, Ram ML, Baidoun FF (1996) Authentication of canned tuna and bonito by sequence and restriction site analysis of polymerase chain reaction products of mitochondrial DNA. *J. Agric. Food Chem*., **44**, 2460–2467.

Rosel PE, Block BA (1996) Mitochondrial control region variability and global population structure in the swordfish, *Xiphias gladius*. *Mar. Biol*., **125**, 11–22.

Seaborn GT, Moore MK (1993) Unscrambling eggs: A biochemical method of species identification to aid in the prosecution of marine turtle egg poachers. In: *Proceedings of the Thirteenth Annual Symposium on Sea Turtle Biology and Conservation* (eds. Schroeder BA, Witherington BE), p. 162. NOAA Technical Memorandum NMFS-SEFSC-341.

Shaffer HB, Meylan P, McKnight ML (1997) Tests of turtle phylogeny: molecular, morphological, and paleontological approaches. *Syst. Biol*., **46**, 235–268.

Swofford DL (2000) *PAUP: Phylogenetic Analysis Using Parsimony*. Illinois National History Survey, Champaign, IL.

White PS, Densmore LD, III (1992) Mitochondrial DNA isolation. In: *Molecular genetic analysis of populations. A practical approach* (ed. Hoelzel AR), pp. 29–58. Oxford University Press, Oxford, U.K.

Woodley CM, Ball RM, Jr. (1996) Identification of marine turtle species: When your science becomes forensic. In: *Proceedings of the International Symposium on Sea Turtle Conservation Genetics* (eds. Bowen BW, Witzell WN), pp. 163–173. NOAA Technical Memorandum NMFS-SEFSC-396.